INMOTION

V12S

Electric Unicycle User Manual

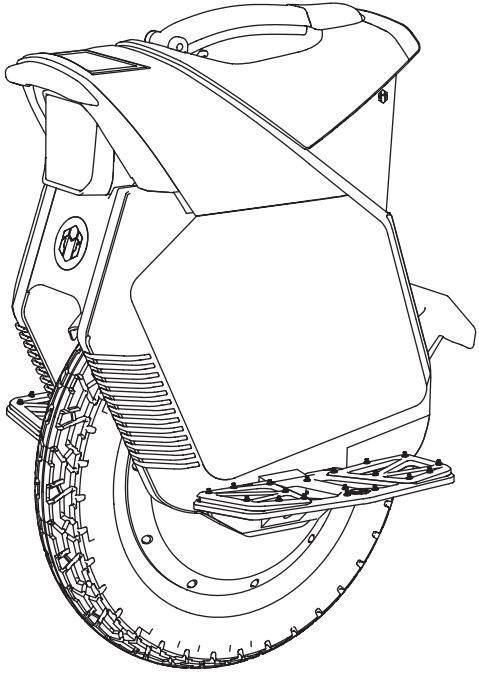

Before using your unicycle, please read the instructions, and keep this manual for ready reference.
Original instructions


INMOTION

GETTING STARTED

Thank you for choosing the INMOTION electric unicycle(hereinafter referred to as the unicycle)! This unicycle is an intelligent high-tech entertainment product. When you use the unicycle, there may be situations such as falling or collision that can cause injury and other risks. To reduce possible risks and ensure the personal and property safety of yourself and others, you have the responsibility and obligation to carefully read the user manual, fully understand all the warnings and precautions listed in this manual, and ensure that you can use it correctly. To obtain the latest feature/function information and safety guidance, please download the electronic version from the official website.
Important! Read carefully and keep for future reference.
Serial number (referred to as SN below) is a unique identifier for each product, which can be used for product warranty, maintenance, insurance claims, loss confirmation, and so on. The SN is a 16-character numeric code that can be found on the packaging box label, the body of the product, or in the device information section of the INMOTION App.
Get closer to your seller so he can refer you to an appropriate training organization.

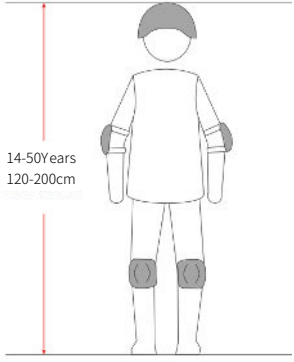

When riding an electric unicycle, please wear a helmet, knee pads, elbow pads, wrist guards and other protective gear throughout the journey to reduce the risk of injury.
All pictures in this manual are for reference only. Please refer to the actual product for accuracy.

PACKING LIST

Please carefully check all components inside the packaging. If any components are missing, please consult your point of purchase.

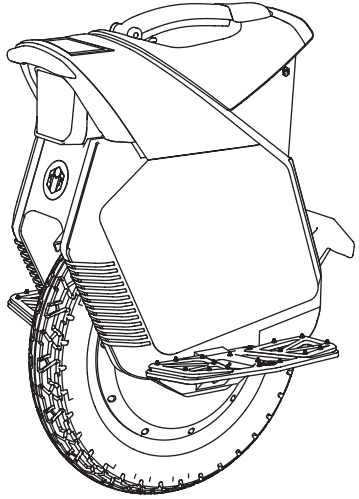



User Manual

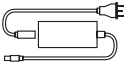

Power Cord /Adapter

WARNING: Please keep the packaging box and packaging materials for at least 30 days for future use when transporting the electric unicycle.

DIAGRAM

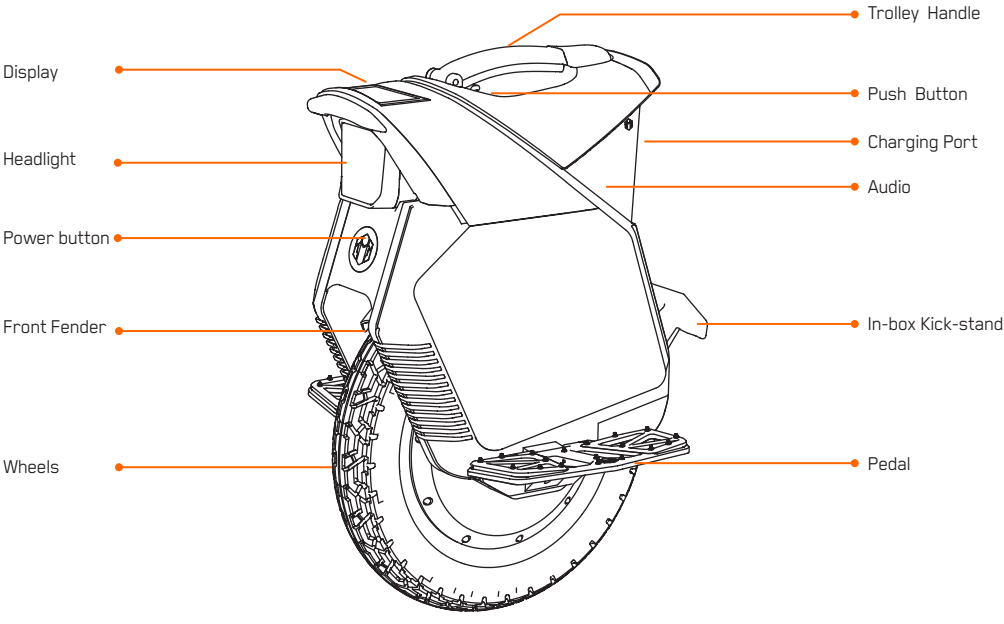
Trolley Handle
Display
Push Button
Charging Port
Headlight
Audio
Power button
In-box Kick-stand
Front Fender
Pedal
Wheels

PRODUCT FEATURES

Power On/Off: Long press the power button to turn on the device, long press the power button to turn off the device when it is on.

Headlight: Short press the power button to turn on/off the headlight when it is on; the headlight can be set to turn on/off automatically in the App.

Tail Light: flashing high when braking; tail light is always on when the headlight is on.

Anti-spin Button: Press and hold the anti-flying button, the vehicle will lose balance.

Touch Screen: Get the riding data in real time and set the vehicle parameters quickly.

Charging

The original charger is 84V ⎓ 9.6A. The blue light indicates the power status, the green light indicates a full charge, and the red light indicates the charging status, indicating that it is currently charging/charging complete. When both chargers are used simultaneously, the charging time will be reduced by 50%. (The maximum input for charging the entire vehicle is 19.2A.)

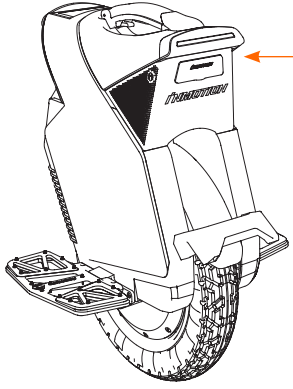



⚠ Warning:

- **Do not charge if there is water at the charging port or power cord.**
- **Please use the original adapter for charging.**
- **Do not charge indoors.**
- **Cover the lid tightly after charging.**
- **Do not charge if the battery is damaged or has been exposed to water.**
- **If not in use for a long time, it is recommended to charge once every three months.**

Trolley Handle

Deploy the actuator by pressing the actuator switch underneath the actuator handle to unlock it; when the actuator is not in use, hold the actuator switch underneath the actuator handle to retract it.

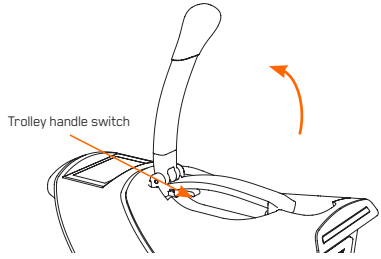

DIMENSION

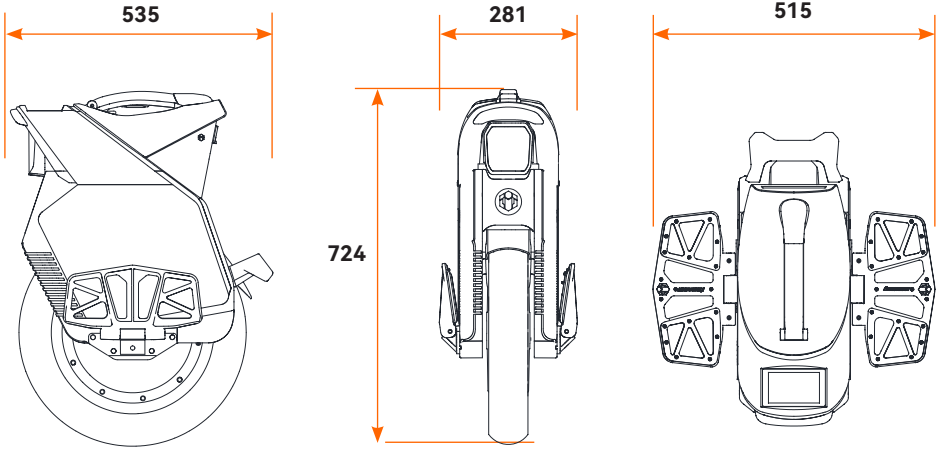

Dashboard

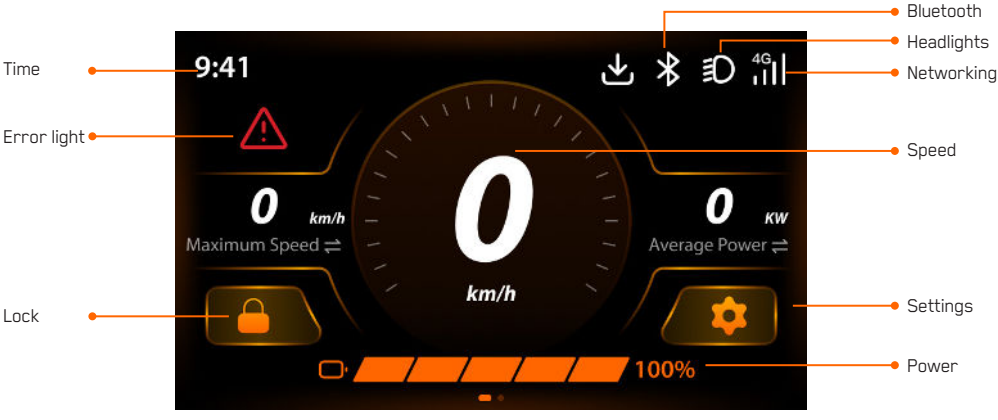

Display contents

Speed unit: Switch the display unit in the APP.
Battery level: The battery level bar and the direct number show the current battery level of the vehicle.
Lock: Switch the display unit in the APP.
Bluetooth: The icon lights up when Bluetooth is connected.
Error icon: the icon lights up when the vehicle is in fault, detailed fault information needs to connect to APP to view.
Headlight Icon: The icon lights up when the headlight is turned on.

PRODUCT PARAMETERS

Specification	Item	Parameter
Basic Information	Model	V12S
	Range(km)	80-120
	Charging time(h)	7h 2.8A; 2h 10A
	Rated power(KW)	2.5
	Max. power(KW)	6
	Designed Maximum Speed(KM/H)	70
	Max. Slope(°)	35°
	Suspension Range(mm)	90
Body	Length*Width*Height(mm)	535*205*724
	Net weight(kg)	35
	Max. Load(kg)	140
	IP Rate	IP56
Battery Pack	Rated Energy(Wh)	1440
	Battery pack waterproof grade	IP67
	Max. Voltage(V)	84
	Intelligent BMS	Over-charging, over-temperature, over-discharge, over-current, short-circuit, over-voltage and other protections
Motor	Motor Size	12inch
	Tire Size (Outer)	3.00-12
	Factory Tire Pressure(BAR)	2.8BAR
	Motor Waterproof Rating	IPX6
Charger	Charger Input (V)	AC 110-240V
	Charger Output (W)	84V 2.8A

⎓

Specification	Item	Parameter
Peripheral Configuration	Charger Interface	GX16-4
	Number of charger ports	2
Lighting Configuration	Headlight	12W
	Illumination Lamps	1.7W
	Tail light-brake light	2W
	Ambient light	5W
Requirements	Applicable age(years)	16~55
	Applicable height(cm)	120-200
	Operating Temperature(℃)	-10-40
	Storage temperature(℃)	-20-40

[1]: Typical range is obtained at full charge, with a load of 90kg, ambient temperature of 25˚C, and riding at speeds of 20 to 40 km/h on a flat, paved road. The range of the wheel is influenced by factors such as temperature, tire pressure, road conditions, and riding habits (such as rapid acceleration and braking).
[2]: fully charged, 90 kg payload, 25˚C, no wind, at the flat road.
[3]: fully charged, 90 kg rider get the data through a large amount of tests.

INITIAL USE

Before Use

Electric Unicycle is a high-tech recreation product. When you ride without following the operation specifications, it may lead to unpredictable injuries and property losses. The following will explain how to use Electric Unicycle and the precautions in details. Please read it carefully and use Electric Unicycle as required. Before using, please make sure that all parts of Electric Unicycle are not damaged and installed properly.

⚠ Warning:

- **Before using the Electric Unicycle, ensure that the battery is fully charged. It is recommended to charge it more than 80 percent of capacity.**
- **Find a relatively open and flat area to practice riding, (at least 4m by 4m in area), both inside and outside. You need to be fully aware of the riding environment around you to ensure that you are not disturbed by obstacles such as cars, pedestrians, pets, bicycles, etc.**
- **You need a skilled assistant stood by. The assistant must be familiar with Electric Unicycle and all precautions and usage methods in this manual.**
- **Please do not ride the vehicle on slippery ground.**
- **Users are advised to wear comfortable, casual or sports clothing, and to wear flats and warm up to improve your flexibility.**
- **Be sure to wear a helmet and riding protective gear to avoid injury.**

Download INMOTION App

Download the App in the following ways
1. Scan the QR code on the left
2. Search "INMOTION" in the Apple store or Google Play Store.
3. Visit www.inmotionworld.com/support/app

⚠ Tips:

Electric Unicycle supports Bluetooth 5.0 BLE. The BLE ID is V12S-XXXXXXXX, where XXXXXXXX is the last 8 digits of SN.
Install the INMOTION App on your mobile device (iOS 12.1 and above or Android 7.0 and above supported) and follow the prompts to connect your Electric Unicycle.
For more functions, please visit the official website to download the latest version of INMOTION App user manual.

LEARNING TO RIDE

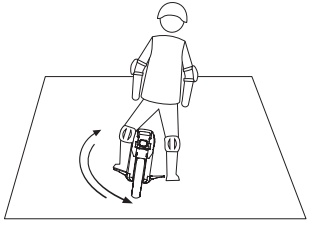

1. Step on the pedal with one foot, then swing back and forth.

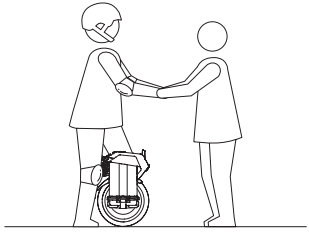

2. Step on the pedal with one foot, keep your feet and body upright and gradually shift your weight up.

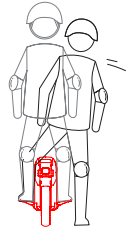

3. Step on the pedal with one foot, lift the other foot off the ground for 1-2 seconds and start gliding.

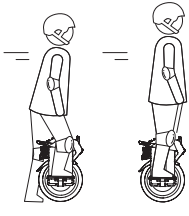

4. Step on the pedal with one foot, push back with the other foot and start gliding.

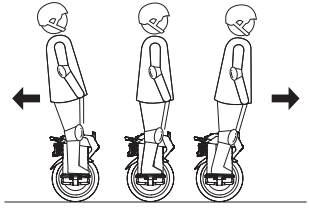

5. Step on pedals with both feet, use your weight to move forward and back.

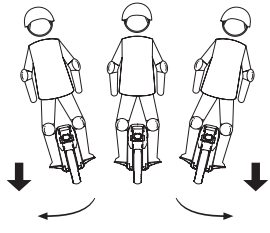

6. Press the pedals with feet by different force to make a turn.

INMOTION App

Facebook group

Website

www.inmotionworld.com