INMOTION

X1

Electric Unicycle User Manual

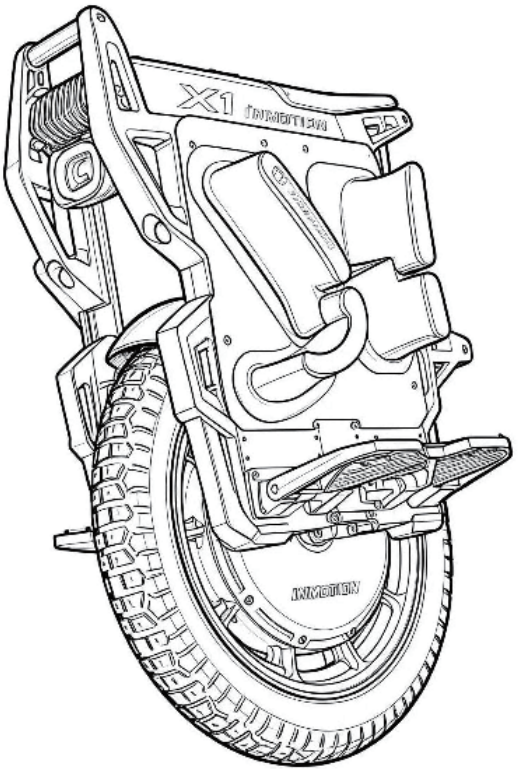

Please read this manual carefully before using your electric unicycle and keep it for future reference.

Original instructions

GETTING STARTED

Thank you for choosing the INMOTION Electric Unicycle (hereinafter referred to as the EUC)! This EUC is an intelligent high-tech entertainment product. When you use the EUC, there may be situations such as falling or collision that can cause injury and other risks. To reduce possible risks and ensure the personal and property safety of yourself and others, you have the responsibility and obligation to carefully read the user manual, fully understand all the warnings and precautions listed in this manual, and ensure that you can use it correctly. To obtain the latest feature/function information and safety guidance, please download the electronic version from the official website.

Important! Read carefully and keep for future reference.

Serial number (referred to as SN below) is a unique identifier for each product, which can be used for product warranty, maintenance, insurance claims, loss confirmation, and so on. The SN is a 16-character numeric code that can be found on the packaging box label, the body of the product, or in the device information section of the INMOTION App.

Contact your seller for information about appropriate training resources.

This User Manual shall be read together with the “Electric Unicycle Maintenance and Legal Disclaimer” included with the product.

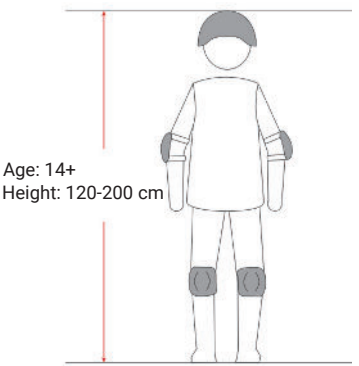

When riding an electric unicycle, please wear a helmet, knee pads, elbow pads, wrist guards, and other protective gear throughout the ride.

All pictures in this manual are for reference only. Please refer to the actual product for accuracy.

PACKING LIST

Please carefully check all components inside the packaging. If any components are missing, please consult your point of purchase.

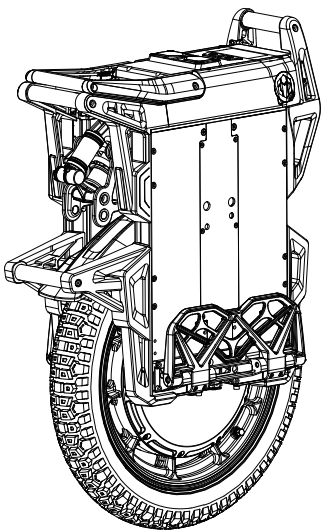



User Manual

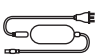

Power Cord / Adapter



Set of Powerpads

Warning: Please keep the packaging box and packaging materials for at least 30 days for future use when transporting the electric unicycle.

DIAGRAM

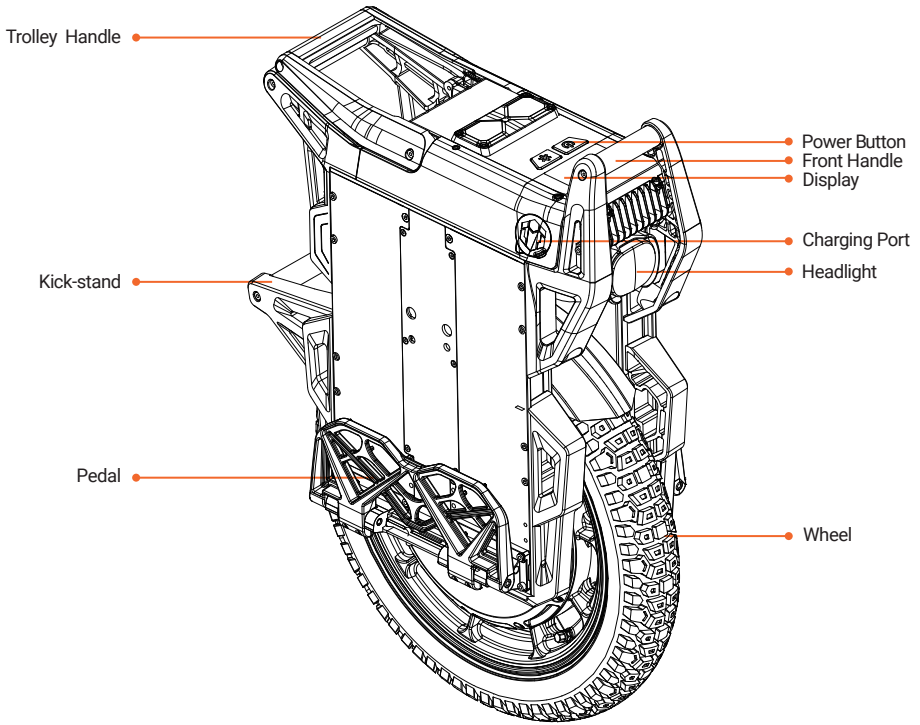
Trolley Handle
Kick-stand
Pedal
Power Button
Front Handle
Display
Charging Port
Headlight
Wheel

PRODUCT FEATURES

Power On/Off: Long press the power button to turn on the device, long press the power button to turn off the device when it is on.
Headlight: Short press the power button to turn on/off the headlight when it is on; the headlight can be set to turn on/off automatically in the App.
The tail light flashes brightly when braking; tail light is always on when the headlight is on.
Parking / Anti-spin Mode: Double-click the power button to enter or exit Parking / Anti-spin Mode.
Display: Displays riding information and vehicle status.

Charging
The standard charger output is DC 235.2 V, 16 A. The blue light indicates that the power is connected.
The green light indicates that the battery is fully charged or in standby mode.
The red light indicates that the battery is charging.
Alternating red and green flashing lights indicate a power-on self-check or an error. (Maximum allowable charging current: 20 A. Use only an official INMOTION charger.)

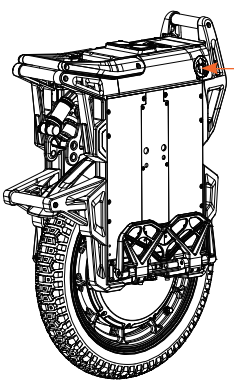

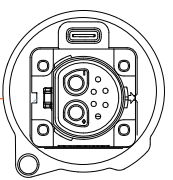

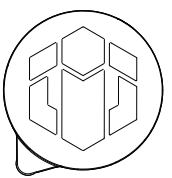

Charging port

⚠ Warning:

- Do not charge if there is water at the charging port or power cord.
- Please use the original INMOTION charger for charging.
- Do not charge in an enclosed, poorly ventilated, hot, or sun-exposed environment. Keep the charging area well ventilated and away from flammable materials
- Cover the lid tightly after charging.
- Do not charge if the battery is damaged or has been exposed to water.
- If not in use for a long time, it is recommended to charge once every three months.

Shock Absorber Damping Force Adjustment

Rebound Adjustment: Turn the rebound adjustment knob clockwise toward FAST for faster rebound, and counterclockwise toward SLOW for slower rebound.
Compression Adjustment: Turn the compression adjustment knob clockwise for firmer compression damping, and counterclockwise for softer compression damping.

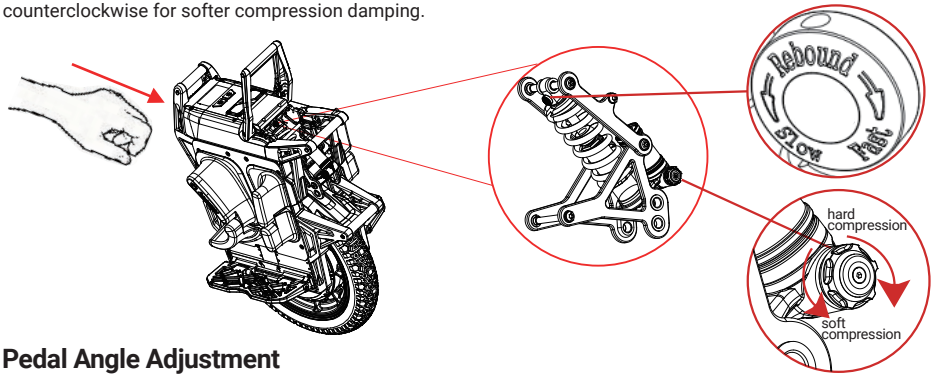

Pedal Angle Adjustment

Increase pedal angle: Align the M5 socket-head cap screw and washer with the screw hole below the pedal, and tighten using an L-shaped wrench.

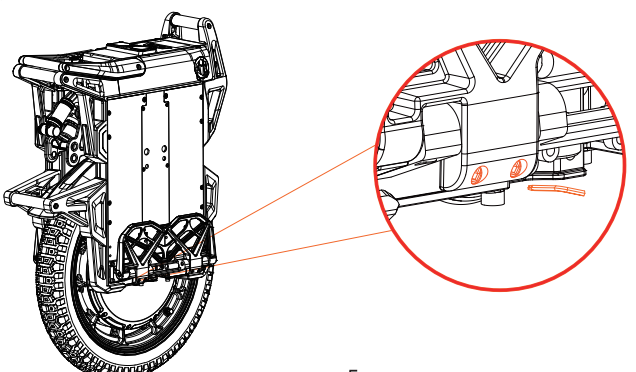

Trolley Handle

To open or close the trolley handle, press and hold the switch on the inner side of the trolley handle.

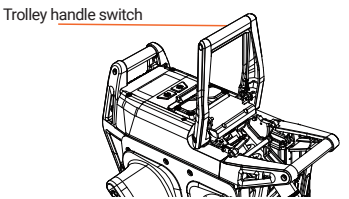

DIMENSION

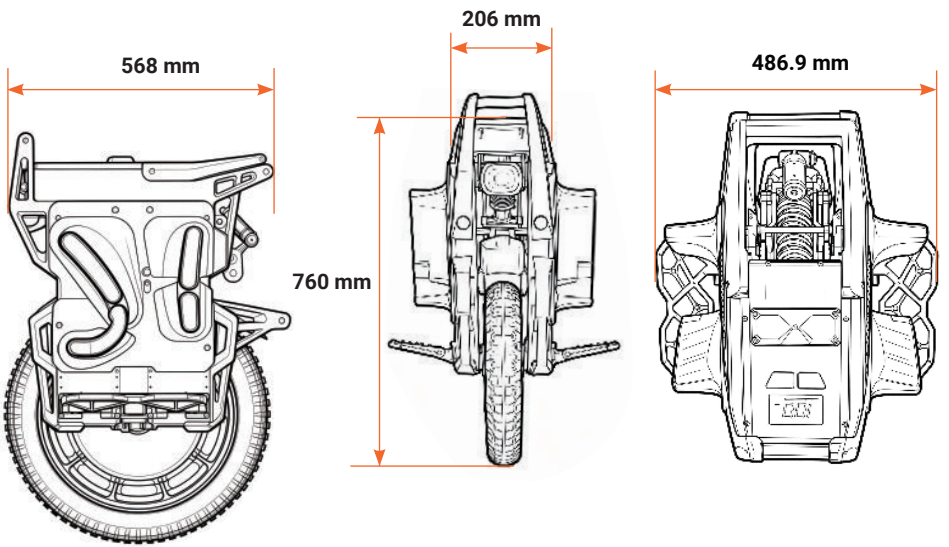

Dashboard


Bluetooth
Lock
Headlight
Fault Indicator
Battery Indicator
120
D
S
P
mph
km/h
188%
Speed Display
Riding Mode Indicator
Speed Unit
Battery Level

PRODUCT PARAMETERS

Specification	Item	Parameter
Basic Information	Model	X1
	Range (km)	70+ [1]
	Charging Time (min)	Approx. 35 (0-90%, with the standard 16 A charger).
	Rated Power (kW)	6
	Max. Power (kW)	20
	Designed Maximum Speed (km/h)	120
	Max. Slope (°)	45° [2]
	Suspension Range (mm)	150 [3]
Body	Length × Width × Height (mm)	568 × 206 × 760
	Net Weight (kg)	41
	Max. Payload (kg)	140
	IP Rating	IP56
Battery Pack	Rated Energy (Wh)	2016 Wh
	Nominal Voltage (V)	201.6
	Battery Pack IP Rating	IP67
	Max. Voltage (V)	235.2
	Intelligent BMS	Over-charging, over-temperature, over-discharge, over-current, short-circuit, over-voltage and other protections
Motor	Rim Size (in)	14
	Tire Size (Outer)	2.75-14
	Factory Tire Pressure (bar)	2.5
	Motor IP Rating	IPX6
Charger	Charger Input (V)	AC 110 - 240 V
	Charger Output	DC 235.2 V, 16 A

Specification	Item	Parameter
Peripheral Configuration	Charger Interface	KC Series 2+6
	Number of charger ports	1
Lighting Configuration	Headlight	20 W
	Side Marker Lights (W)	3 × 2
	Tail Light / Brake Light (W)	1
Requirements	Applicable Height (cm)	120-200
	Operating Temperature (℃)	-10-45
	Storage Temperature (℃)	-20-45

[1]: Riding range was tested with the vehicle fully charged, a 90 kg load, an ambient temperature of 25°C, a tire pressure of 2.5 bar, and a riding speed of 25–40 km/h on mixed road surfaces. Actual range may vary depending on ambient temperature, tire pressure, riding habits, road conditions, and other factors.

[2]: For maximum-speed data: fully charged battery, 90 kg rider, 25°C ambient temperature, no wind, on a flat road.

[3]: For maximum-slope data: fully charged battery, 90 kg rider; value obtained from actual testing.

INITIAL USE

Before Use

Electric Unicycle is a high-tech recreation product. When you ride without following the operation specifications, it may lead to unpredictable injuries and property losses. The following will explain how to use Electric Unicycle and the precautions in detail. Please read it carefully and use Electric Unicycle as required. Before using, please make sure that all parts of Electric Unicycle are not damaged and installed properly.

⚠ Warning:

- Before using the Electric Unicycle, ensure that the battery is sufficiently charged. It is recommended to have at least 80% battery capacity before practice riding.
- Find a relatively open and flat area to practice riding, (at least 4 m × 4 m in area), both inside and outside. You need to be fully aware of the riding environment around you to ensure that you are not disturbed by obstacles such as cars, pedestrians, pets, bicycles, etc.
- You need a skilled assistant standing by. The assistant must be familiar with Electric Unicycle and all precautions and usage methods in this manual.
- Please do not ride the vehicle on slippery ground.
- Users are advised to wear comfortable, casual or sports clothing, and to wear flat-soled, closed-toe shoes and warm up to improve your flexibility.
- Be sure to wear a helmet and appropriate riding protective gear to reduce the risk of injury.
- Before riding, read the Electric Unicycle Safe Riding Notice included with the product in full.

Download INMOTION App

Download the App in the following ways
1. Scan the QR code on the left
2. Search "INMOTION" in the Apple App Store or Google Play Store.
3. Visit www.inmotionworld.com/support/app

⚠ Tips:

The Electric Unicycle supports Bluetooth 5.0 BLE. The BLE ID is X1-XXXXXXXX, where XXXXXXXX is the last 8 digits of SN.
The INMOTION App supports iOS 12.1 or later and Android 7.0 or later and follow the prompts to connect your Electric Unicycle.
For more functions, please visit the official website to download the latest version of INMOTION App user manual.

LEARNING TO RIDE

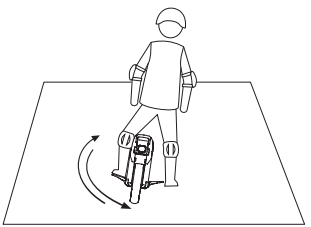

1. Step on the pedal with one foot, then swing back and forth.

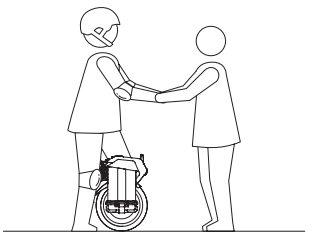

2. Step on the pedal with one foot, keep your feet and body upright and gradually shift your weight onto the pedal.

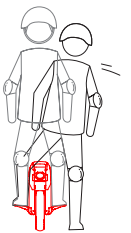

3. Step on the pedal with one foot, lift the other foot off the ground for 1-2 seconds and start gliding.

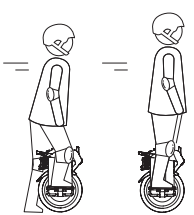

4. Step on the pedal with one foot, push off with the other foot and start gliding.

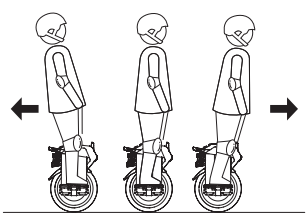

5. Step on both pedals and use your body weight to move forward and backward.

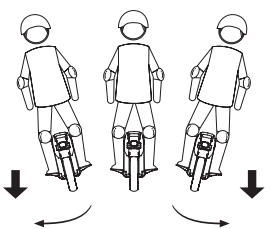

6. Apply different pressure to the pedals with your feet to turn.

FCC STATEMENT

This device complies with Part 15 of the FCC Rules. Operation is subject to the following two conditions:
(1) This device may not cause harmful interference, and
(2) This device must accept any interference received, including interference that may cause undesired operation.
⚠ **WARNING**: Changes or modifications not expressly approved by the party responsible for compliance could void the user's authority to operate the equipment.

NOTE: This equipment has been tested and found to comply with the limits for a Class B digital device, pursuant to Part 15 of the FCC Rules. These limits are designed to provide reasonable protection against harmful interference in a residential installation. This equipment generates, uses, and can radiate radio frequency energy and, if not installed and used in accordance with the instructions, may cause harmful interference to radio communications. However, there is no guarantee that interference will not occur in a particular installation. If this equipment does cause harmful interference to radio or television reception, which can be determined by turning the equipment off and on, the user is encouraged to try to correct the interference by one or more of the following measures:

- Reorient or relocate the receiving antenna.
- Increase the separation between the equipment and receiver.
- Connect the equipment into an outlet on a circuit different from that to which the receiver is connected.
- Consult the dealer or an experienced radio/TV technician for help.

RF WARNING STATEMENT

The device has been evaluated to meet general RF exposure requirements. The device can be used in portable exposure condition without restriction.



INMOTION App



Instagram



Website

www.inmotionworld.com